BLACKSNAKE MODELS

SCULPTING IMAGINATION BEYOND LIMITS

1/35

NOTICE DE MONTAGE

VAB 12/7

Coque, trains roulants et équipements de maquette



MAQUETTE • Préparation et montage illustré

BLACKSNAKE MODELS

SCULPTING IMAGINATION BEYOND LIMITS

FRENCH VAB 12/7



French armored personnel carrier

The VAB (French: Vhicule de l'Avant Blind, meaning «forward-facing armored vehicle») is a French armored personnel carrier. Developed by Renault and Savi for the French Army, the VAB entered serial production in 1976. More than 5,000 vehicles of this type have been produced in various configurations, both on the basic two-axle chassis and on a three-axle chassis. Approximately 4,000 of these vehicles entered service with the French Army, which used them in the Gulf War and in a number of peacekeeping missions. The VAB is also actively exported and is in service with approximately 15 other countries.

Il VAB (in francese: Vhicule de l'Avant Blind, che significa «veicolo blindato rivolto in avanti») un veicolo trasporto truppe francese. Sviluppato da Renault e Savi per l'esercito francese, il VAB entrato in produzione in serie nel 1976. Pi di 5.000 veicoli di questo tipo sono stati prodotti in varie configurazioni, sia sul telaio base a due assi che su quello a tre assi. Circa 4.000 di questi veicoli sono entrati in servizio con l'esercito francese, che li ha utilizzati nella Guerra del Golfo e in diverse missioni di mantenimento della pace. Il VAB anche attivamente esportato ed in servizio in circa 15 altri paesi.

Le VAB (Vhicule de l'Avant Blind) est un v hicule blind de transport de troupes fran ais. D velopp par Renault et Savi pour l'arme de terre franaise, le VAB est entr en production en srie en 1976. Plus de 5 000 vhicules de ce type ont t produits dans diverses configurations, sur chssis de base deux essieux ou trois essieux. Environ 4 000 de ces vhicules sont entrs en service dans l'arme de terre franaise, qui les a utiliss pendant la guerre du Golfe et dans plusieurs missions de maintien de la paix. Le VAB est galement activement export et est en service dans une quinzaine d'autres pays.

VAB (фр. Vhicule de l'Avant Blind— «бронированная машина переднего края») — французский бронетранспортёр. Разработан компаниями «Рено» и «Савье» по заказу французской армии. Серийное производство VAB ведётся с 1976 года, всего было выпущено более 5000 машин этого типа в различных вариантах, как на базовом двухосном шасси, так и на трёхосном. Около 4000 из выпущенных машин поступили на вооружение французской армии, использовавшей их в Войне в Персидском заливе, а также в ряде миротворческих миссий. Помимо этого, VAB активно поставляется на экспорт и состоит на вооружении примерно 15 других стран.

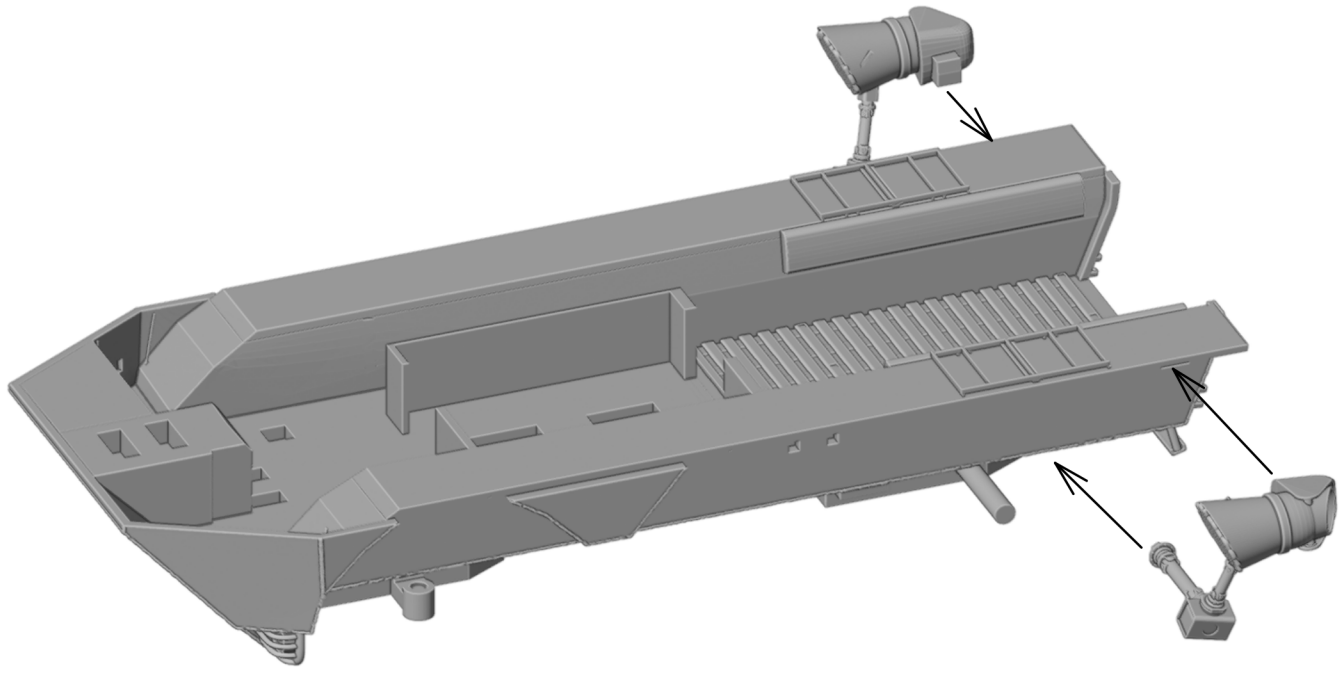



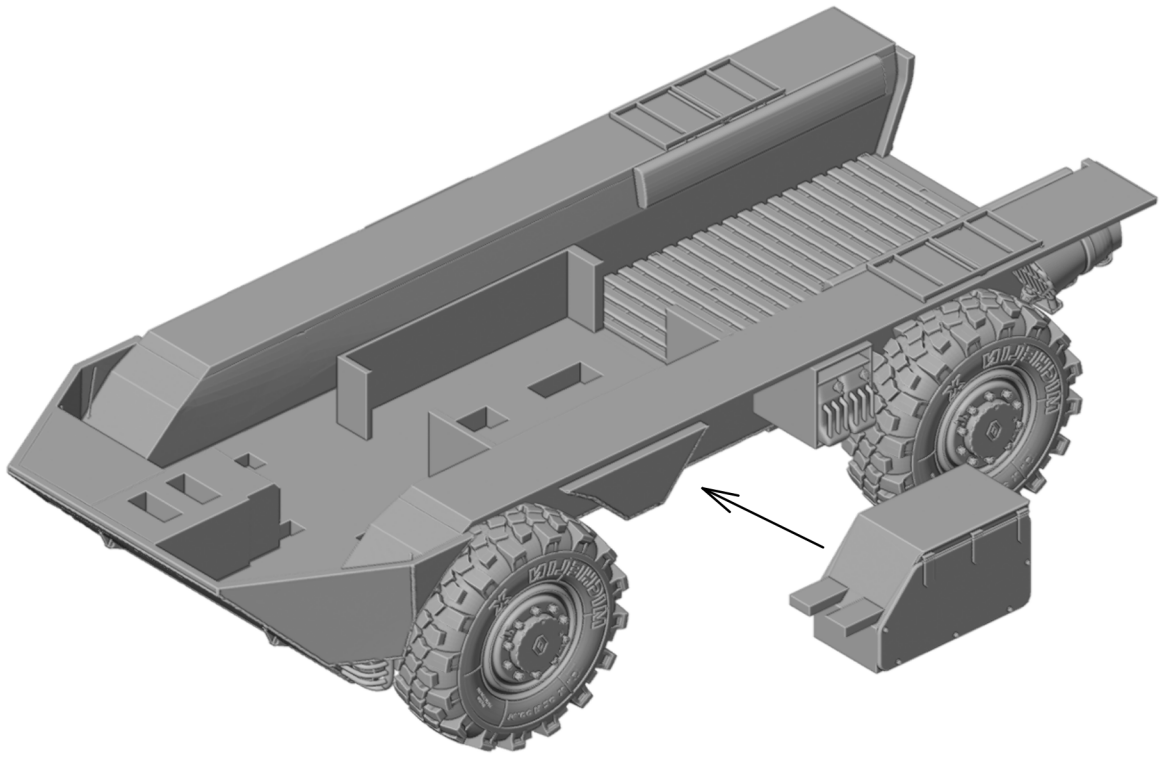

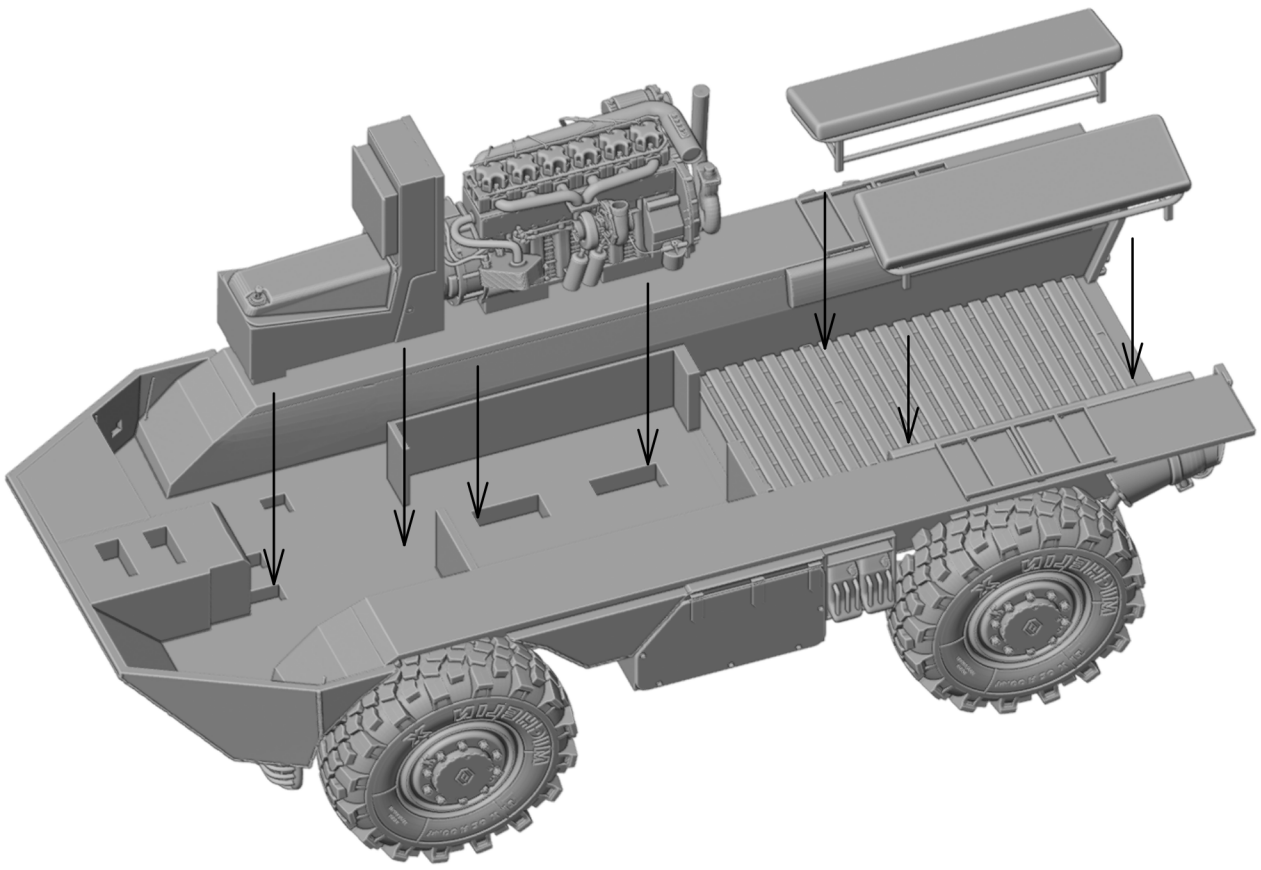

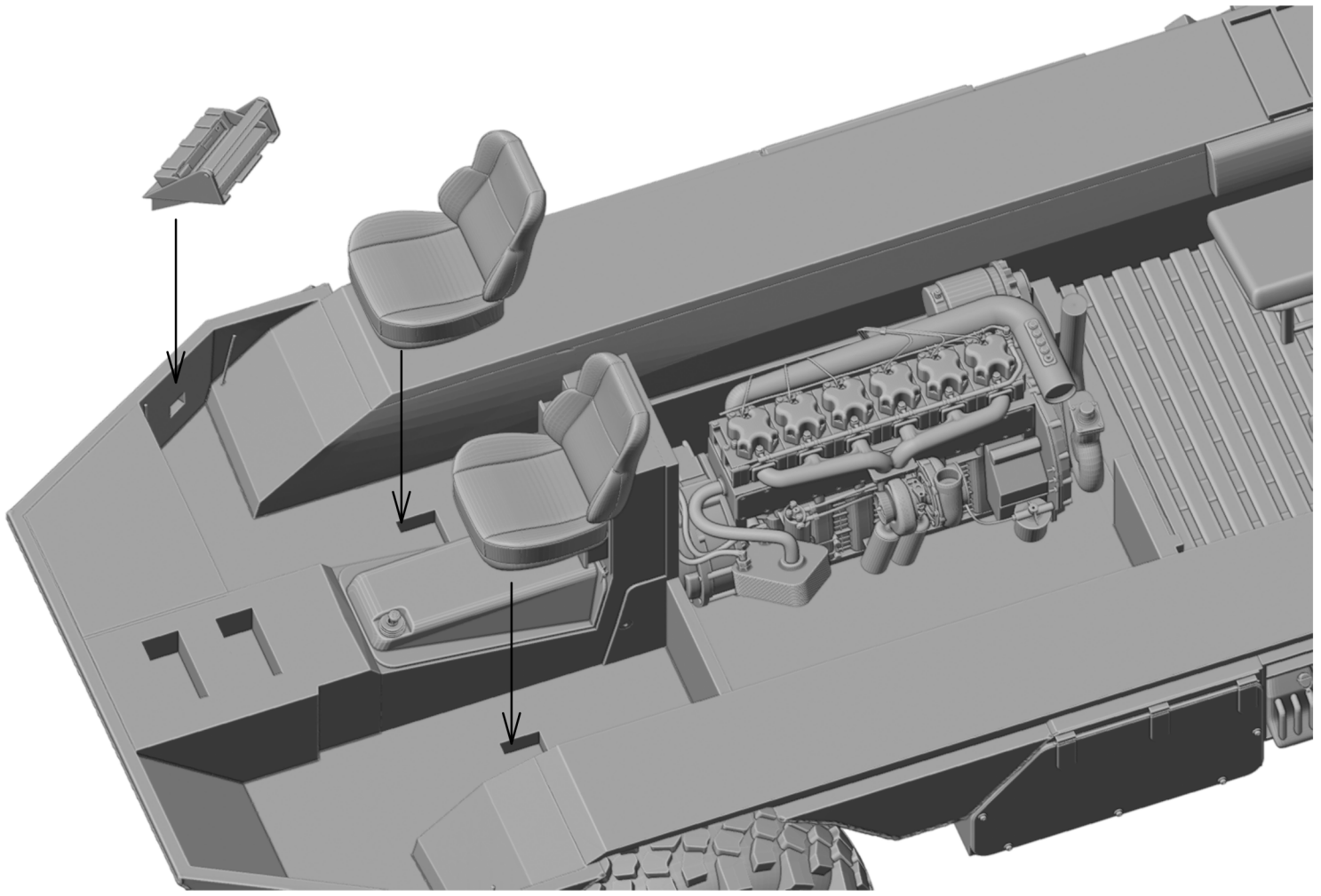

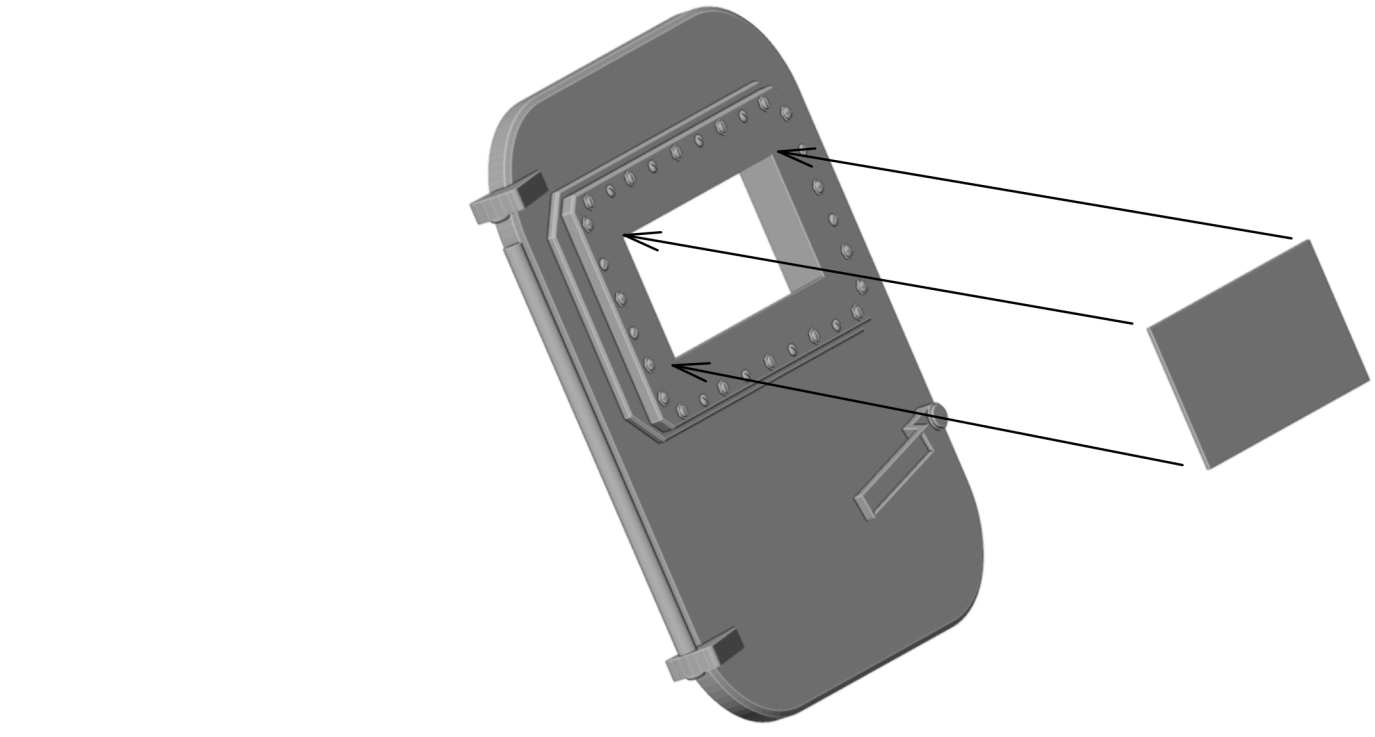

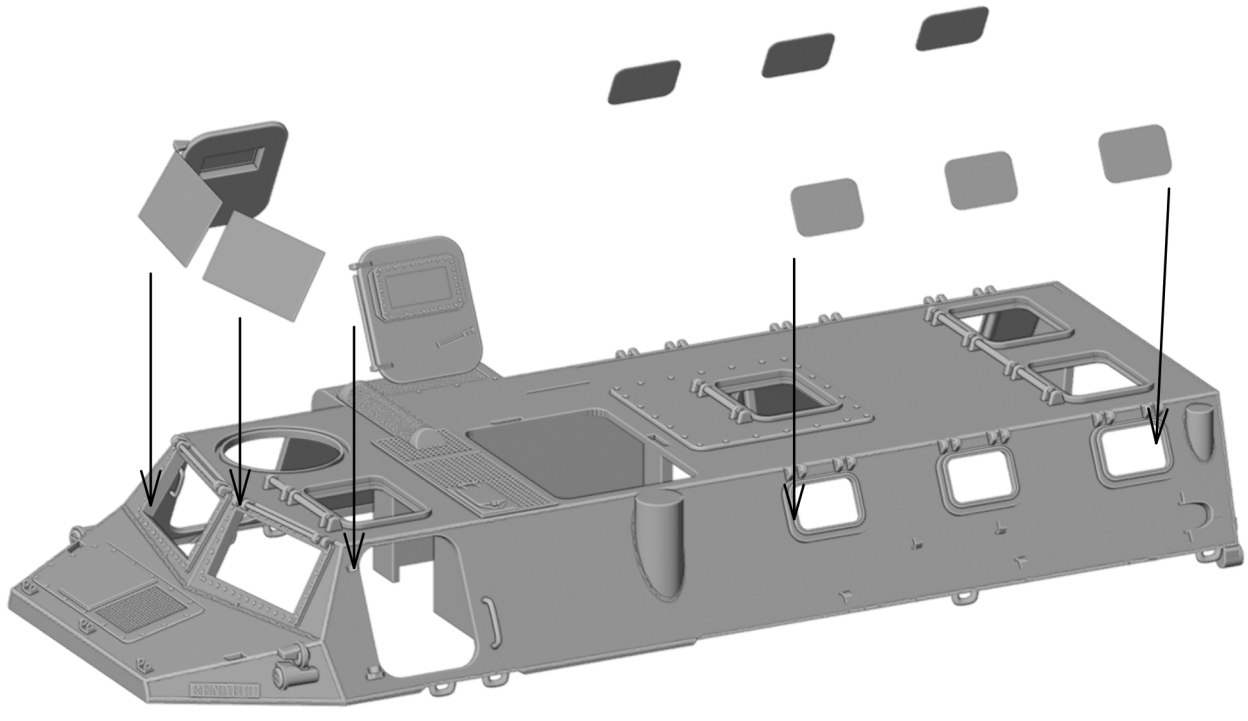

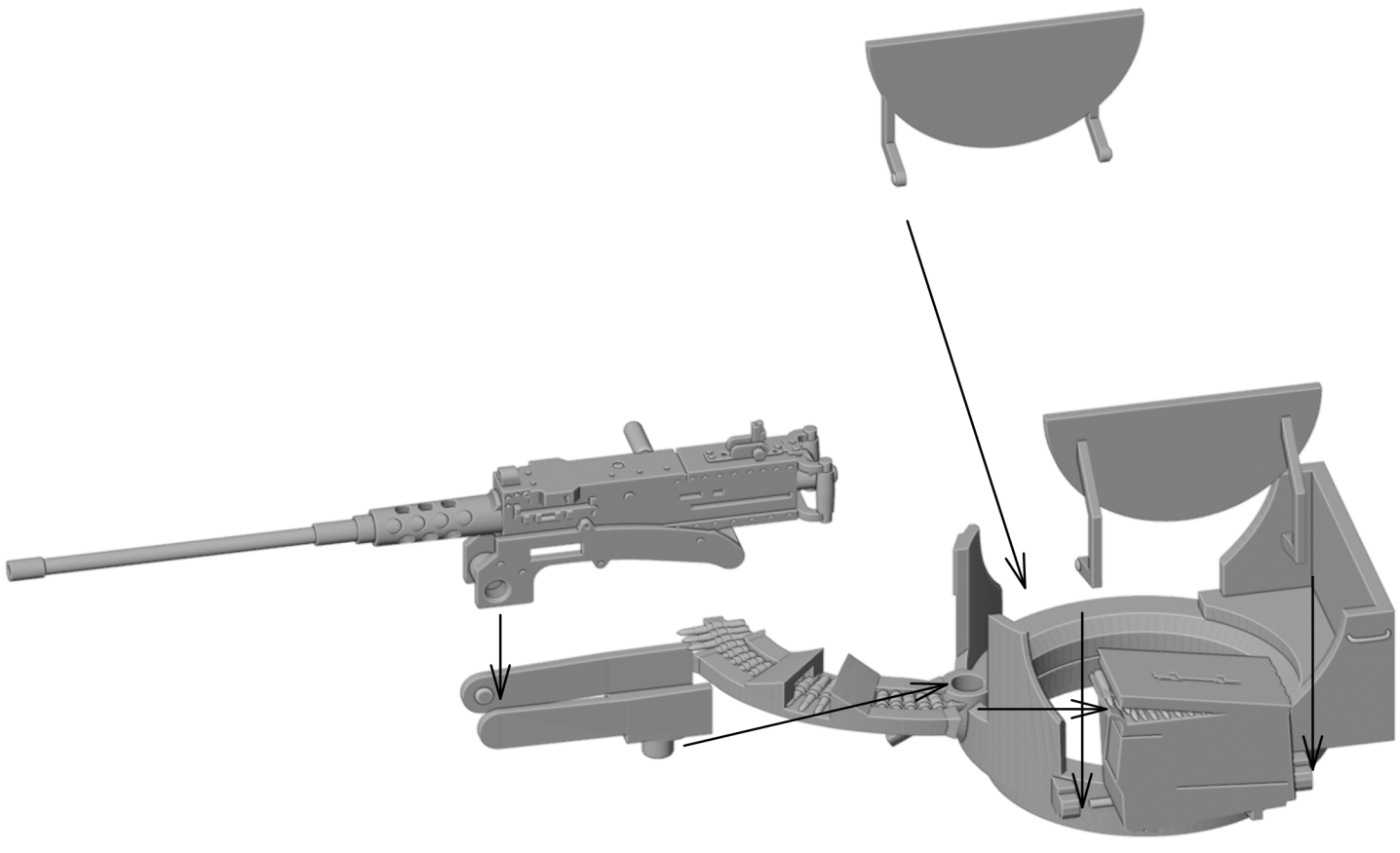

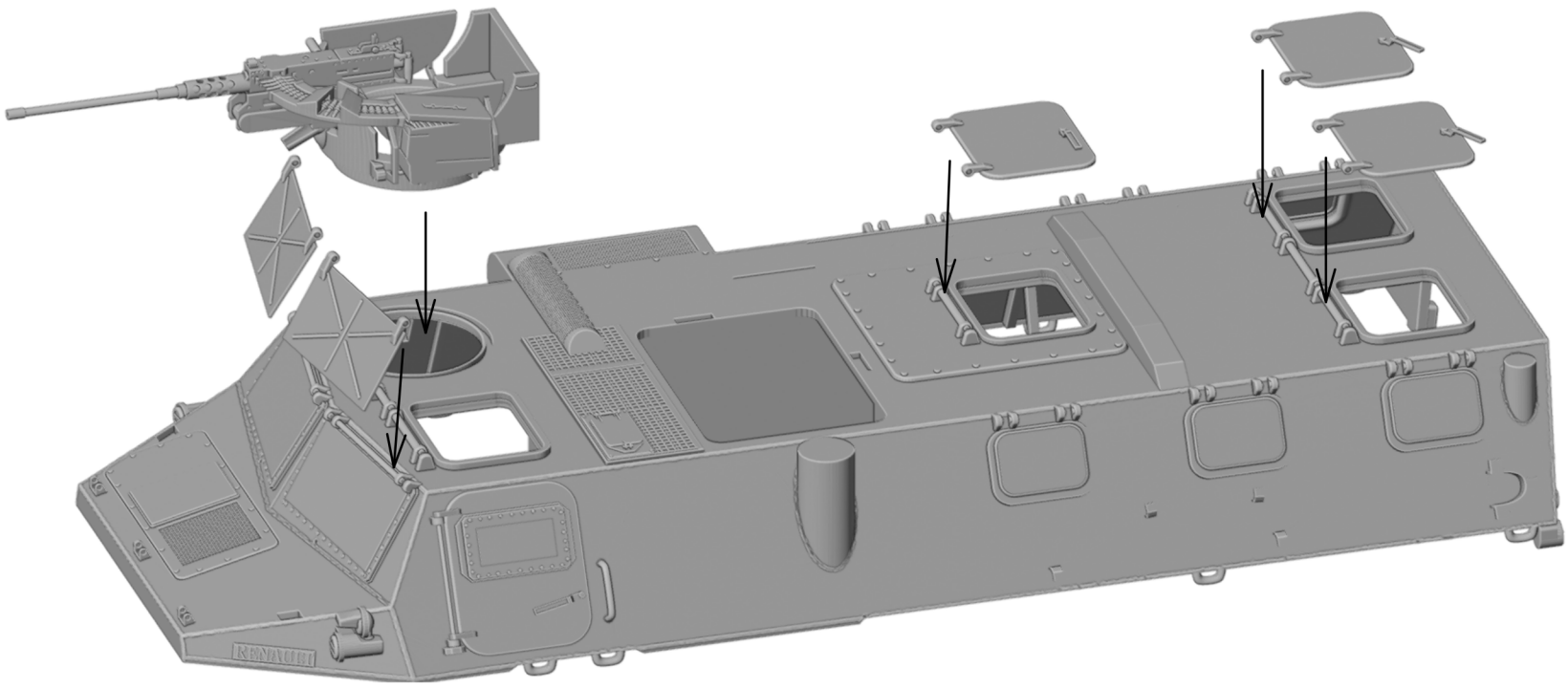
RENAULT

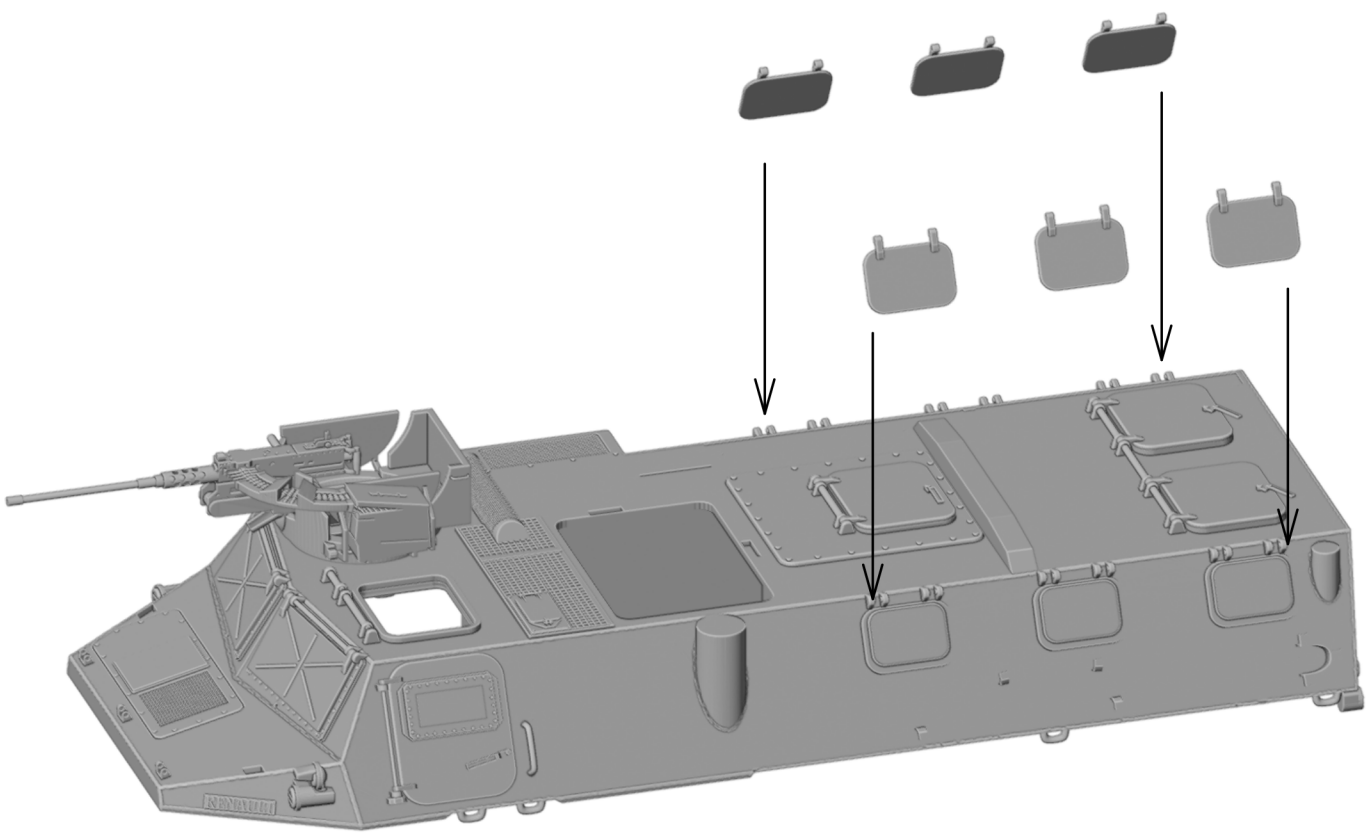
RENAULT

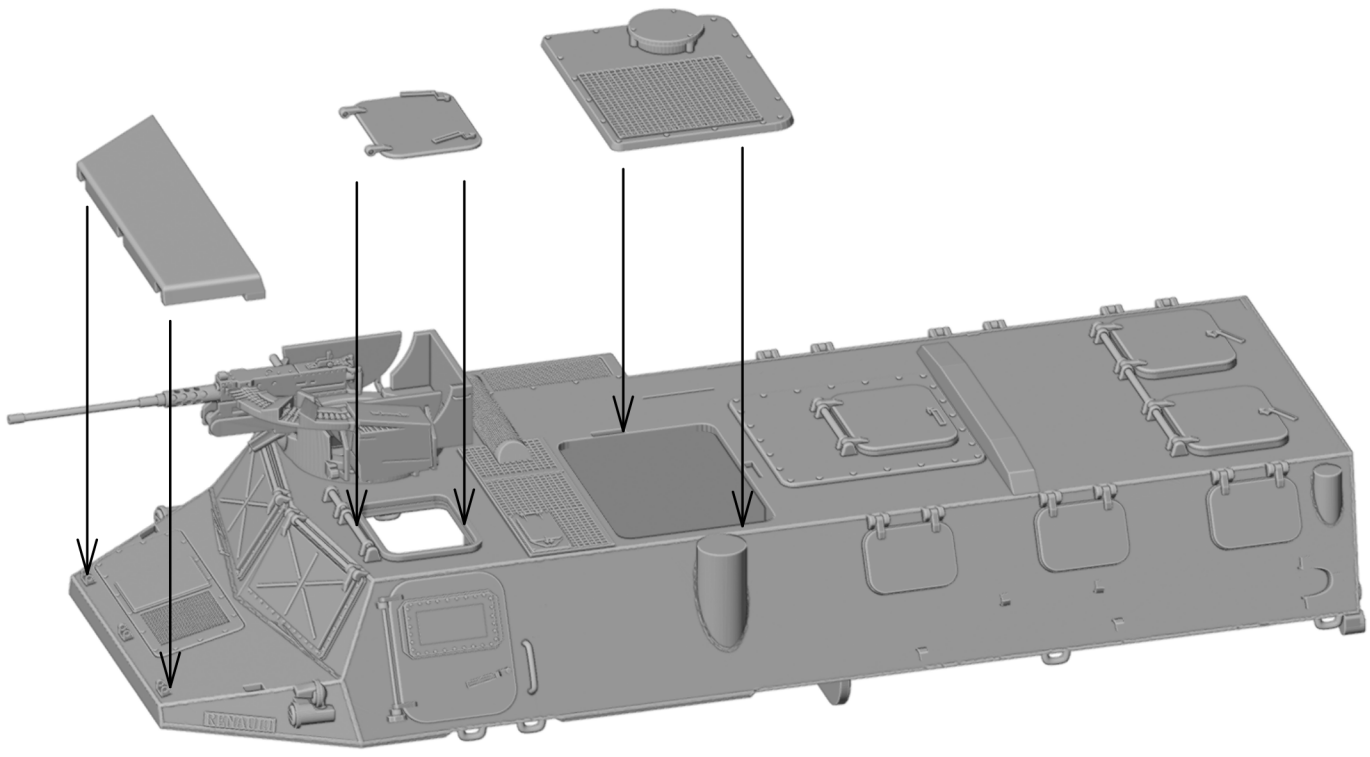
RENAULT

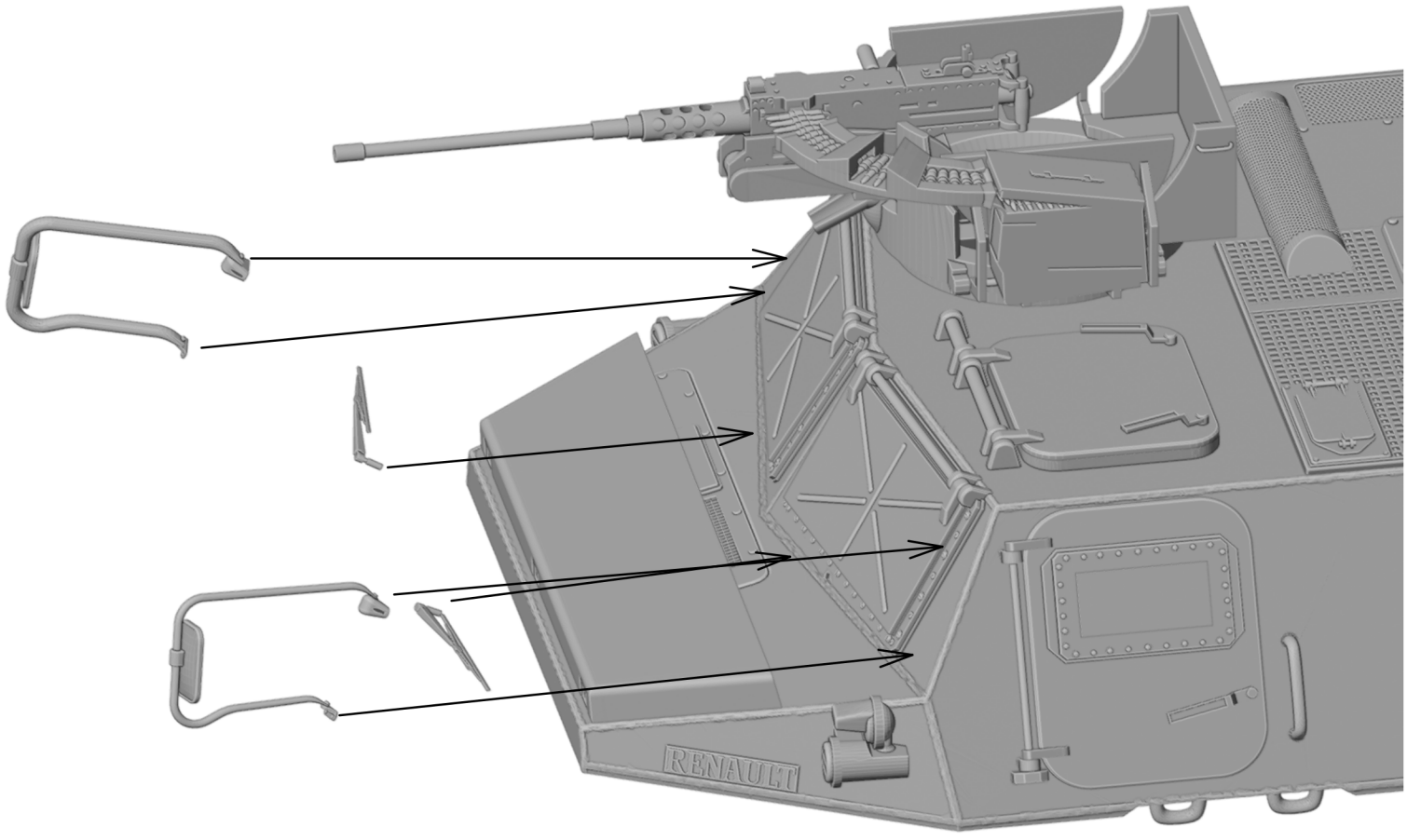
RENAULT

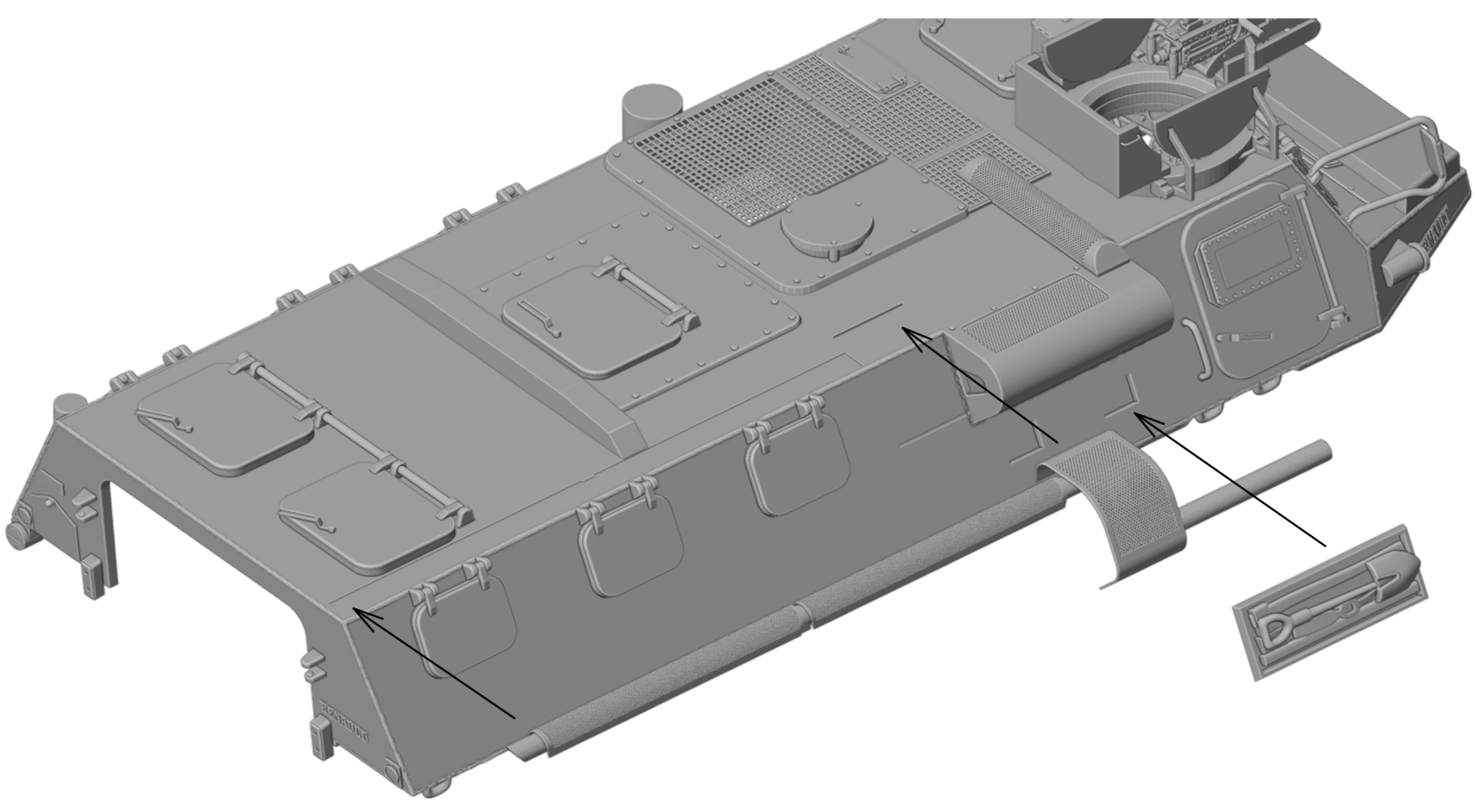
RENAULT

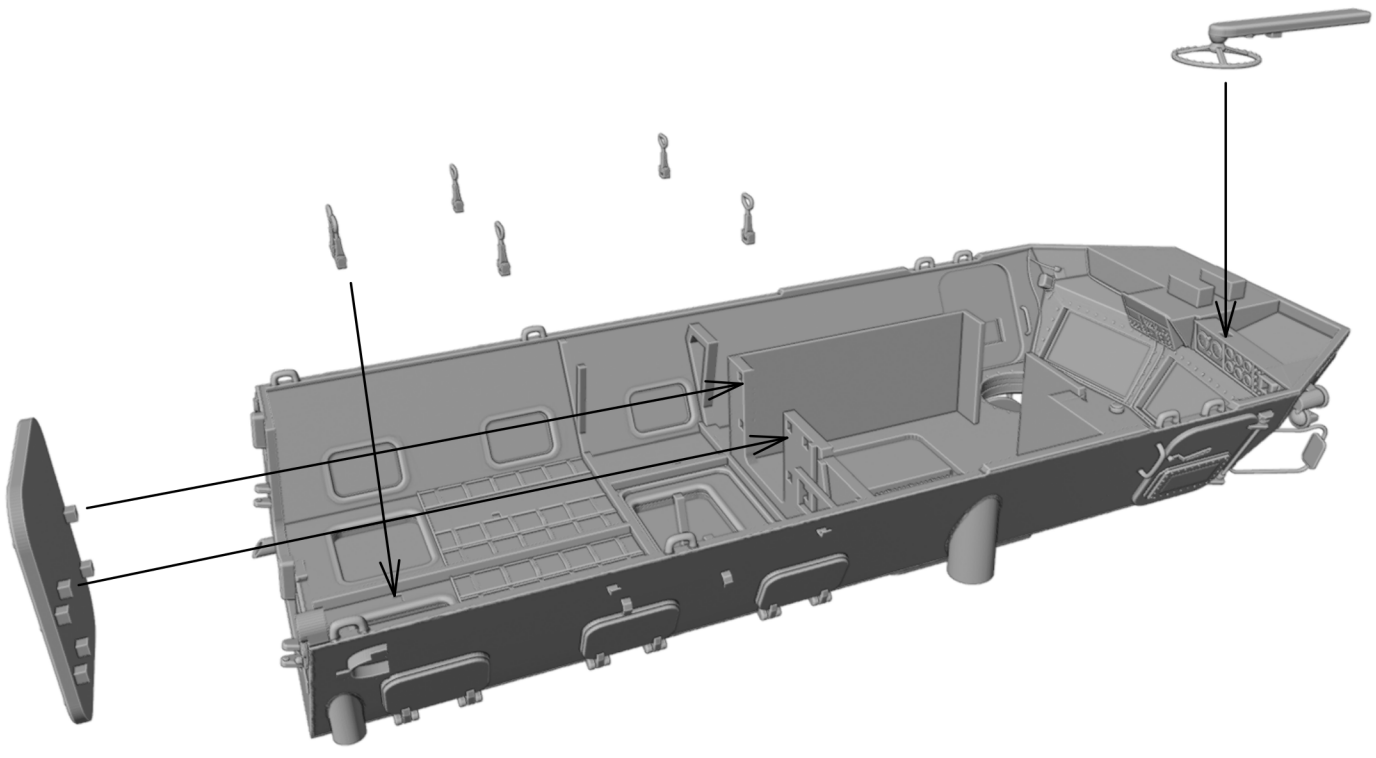

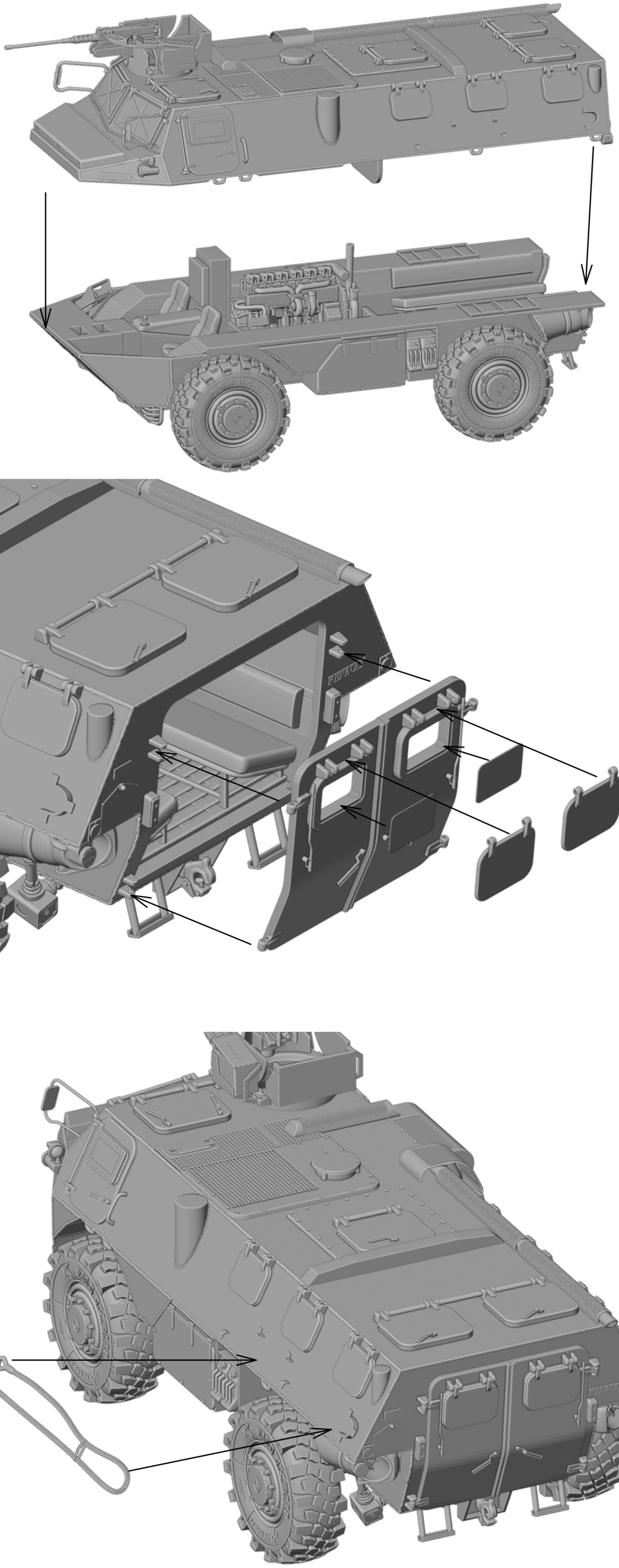

3D Printed Kits – Important Information

1. Layer lines and surface marks: this is normal

Your parts are produced with resin 3D printing, layer by layer.
Light layer lines, tiny support contact points or a very fine texture on some surfaces are completely normal.

Once you apply a primer, most of these marks become barely visible.
For areas that still show some marks, you can:
- gently sand with fine sandpaper (600–1000 grit) or a soft sanding sponge;
- avoid pressing too hard so you don't lose fine details.

These small marks are not casting defects; they are a technical characteristic of the 3D printing process.

2. Tip: easier support removal (hot water method)

1) Prepare a bowl or mug with hot water (around 60–70°C, not boiling).
2) Gently dip the part (for example a vehicle kit still on its supports) without touching the sides, for about 10–20 seconds.
3) Take the part out and pat it dry.
4) While the resin is still slightly flexible, cut the supports with a fine sprue cutter, instead of pulling hard.
5) Let the part cool on a flat surface. If something is slightly bent, you can carefully straighten it while it is still warm.

Warning:
- do not use boiling water;
- do not let children handle hot water or tools;
- never heat the resin directly with an open flame.

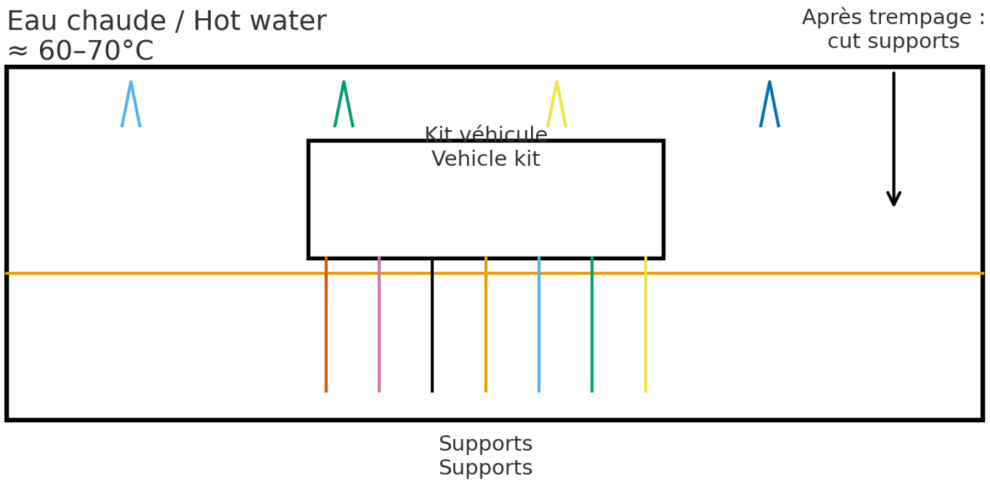

3D Printed Kits – Important Information

1. Layer lines and surface marks: this is normal

Your parts are produced with resin 3D printing, layer by layer.
Light layer lines, tiny support contact points or a very fine texture on some surfaces are completely normal.

Once you apply a primer, most of these marks become barely visible.
For areas that still show some marks, you can:
- gently sand with fine sandpaper (600–1000 grit) or a soft sanding sponge;
- avoid pressing too hard so you don't lose fine details.

These small marks are not casting defects; they are a technical characteristic of the 3D printing process.

2. Tip: easier support removal (hot water method)

1) Prepare a bowl or mug with hot water (around 60–70°C, not boiling).
2) Gently dip the part (for example a vehicle kit still on its supports) without touching the sides, for about 10–20 seconds.
3) Take the part out and pat it dry.
4) While the resin is still slightly flexible, cut the supports with a fine sprue cutter, instead of pulling hard.
5) Let the part cool on a flat surface. If something is slightly bent, you can carefully straighten it while it is still warm.

Warning:
- do not use boiling water;
- do not let children handle hot water or tools;
- never heat the resin directly with an open flame.

